naturaled®
Turning Light into Savings

HIGH BAY ROUND (IP65)

Project

Schedule Date

Notes

DESCRIPTION

naturaLED® High Bay Round comes with an IP65 rating, making it able to resist water and withstand various outdoor weather conditions. It's uniquely designed for multiple outdoor settings such as, warehouses, facades, landscapes, perimeter, parking lots and more. Our high bay round are compact, lightweight fixture provides efficiency of 150lm/w and perfect replacement for HID fixture. With the ability to replace up to 400-watt fixture and adjustable pre-installed hook design, it's the perfect easy hanging mount option for any environment that still utilizes traditional HID and linear fluorescent high bay.

5 YEAR WARRANTY

IP 65 rated

ETL Sanitation Certified

FEATURES

- DLC Premium Qualified
- IP65 Rated
- ETL Sanitation Certified
- 1/2" NPT pipe thread
- Excellent thermal design
- Corrosion resistant powder coating
- Preinstalled fixture hook
- 6 feet SO cord for easy installation
- Dimmable: 0-10V
- Input line voltage: 120-277V
- Input current: 0.99A
- Surge protect level: <4KV
- Power Factor: >0.99
- THD: <20%
- Beam Angle 110˚
- Operating temperature: -22˚F-122˚F
- Material: Die Cast Aluminum
- Finish: White

APPLICATIONS

- Warehouse Lighting
- Architectural Lighting
- Perimeter Lighting
- Commercial Lighting

WARRANTY

- 5 Year Warranty

Ordering Information EXAMPLE: LED-FX11HBR90/110/850/IP65

LED	FX	11	HBR	90	110	850	IP65
LED	Category	Size	Series	Wattage	Beam Angle	Color Temp	Ratings
	FX Fixture	**11** 11inch	**HBR** High Bay Round	**90** 90W	**110** 110˚	**850** 5000K	**IP65** IP65 Ratings

© 2020 naturaLED® All rights reserved

ORDERING

*P= Premium DLC / *S = Standard DLC

Watts (W)	Ordering Code	Description	Color Temp (K)	Lumens (lm)	Equiv. Wattage (W)	Diameter	Beam Angle	Rated Hrs	IP 65	DLC (S/P)
90	7759	LED-FX11HBR90/110/850/IP65	5000K	13,631	400W	11-inch	110°	50,000	•	P
136	7760	LED-FX13HBR135/110/850/IP65	5000K	20,474	400-575W	13-inch	110°	50,000	•	P

SPECIFICATIONS

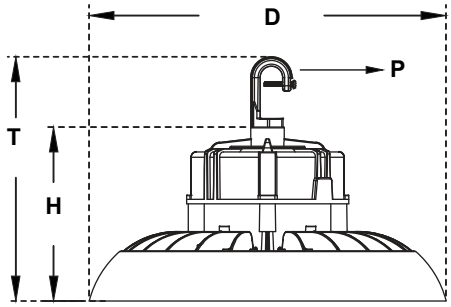

Wattage	Diameter (D)	Height(H)	Total Height (T)	Pendant (P)	Weight
90W	10.7"(272mm)	6.02" (153mm)	8.57" (218mm)	1/2" NPT	6.91 lbs
135W	13" (330mm)	6.34" (161mm)	8.88" (225mm)	1/2" NPT	10.0 lbs

PHOTOMETRICS CHART

90 Watt

DLC Premium

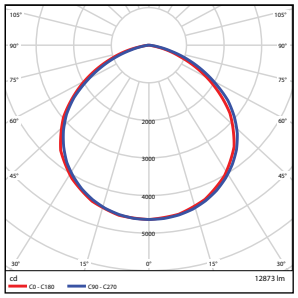

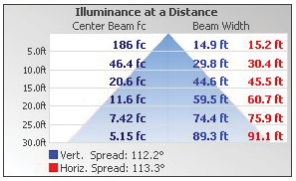

135 Watt

DLC Premium

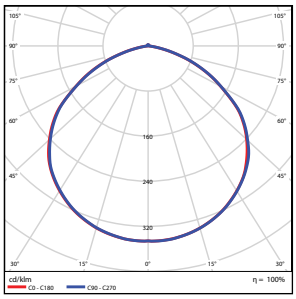

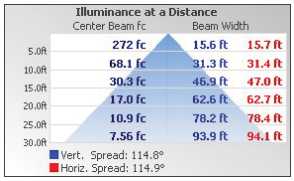

PACKAGE

Master Pack: 1

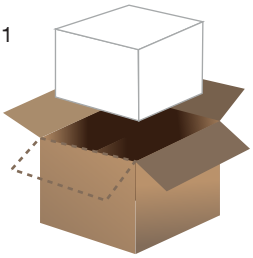

© 2020 naturaLED® All rights reserved